Model	Voltage		No Load		At Maximum Efficiency					Stall		
	Operating Range	Nominal	Speed	Current	Speed	Current	Torque		Output	Torque		Current
			RPM	A	RPM	A	g.cm	mN.m	W	g.cm	mN.m	A
LDM-550SH-65030	2.4~14V	12.0V Constant	16700	1.04	14500	6.77	392.9	38.52	58.39	2943.7	288.6	43.93
LDM-555SH-37054	9.0~24V	12.0V Constant	4300	0.2	3700	1.35	298.1	29.2	11.44	2282	223.6	8.95

Drawing

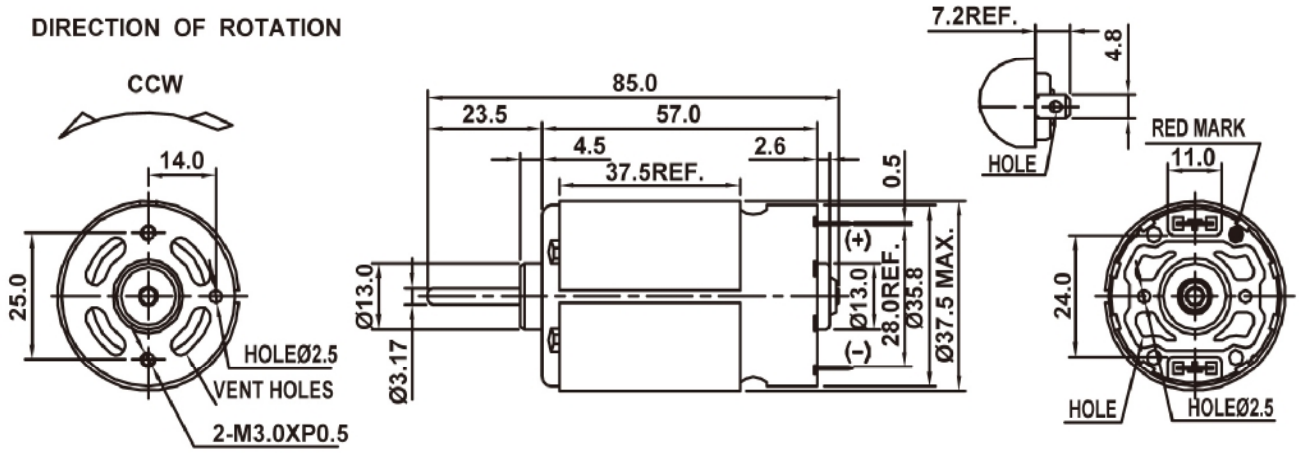

WEIGHT:223g(APPROX)

上述尺寸单位:mm

Performance Curve

LDM-550SH-65030

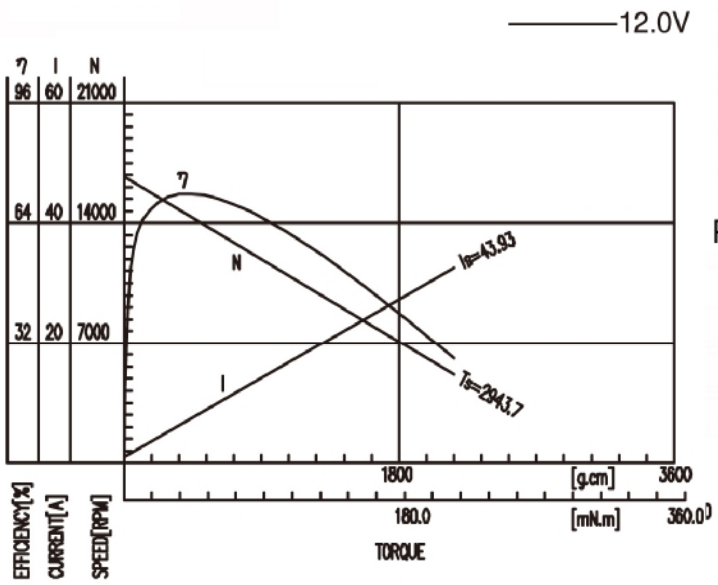

Description

Application:

Cordless electric toys, electric tools, hair dryer, vacuum cleaner, multi-mixer, Food processor, Household appliances, Air pump, water pump, etc.

典型应用

无绳电动玩具，电动工具，吹风机，吸尘器，搅拌机等家用电器，气泵，水泵等。

常用的标准轴长：75/76/81mm

Normal shaft length: 75/73/81mm

P. S. :

The above motor performance is only for reference purposes. We can design the motors according to customers' requirements of specific motor parameters, shaft length, lifetime etc.

备注:

上述电机性能仅供参考，具体电机性能参数，轴长，寿命要求，各项认证要求可根据客户的实际要求进行设计。